XILINX®

The Residential Gateway

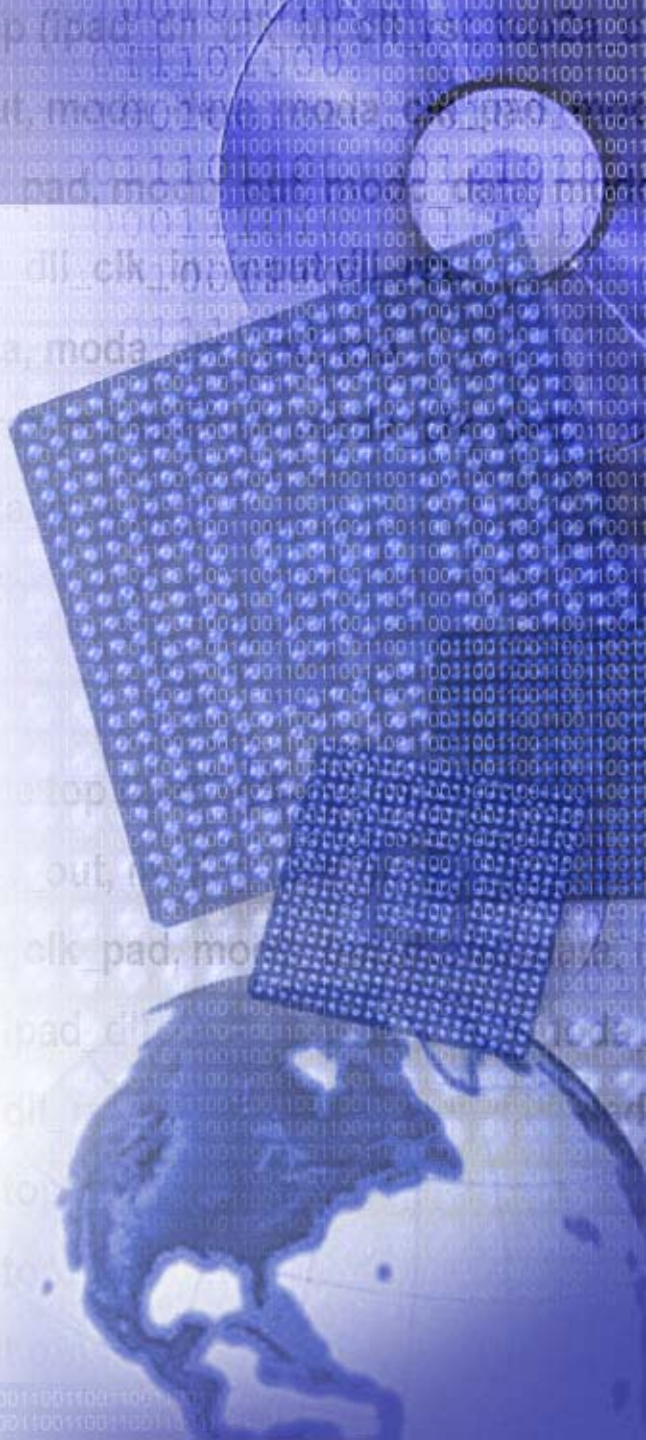

2001 HOME NETWORKING INTERNATIONAL SEMINAR SERIES

esp EMERGING STANDARDS & PROTOCOLS

Agenda

- What is a Residential gateway (RG)?
- Phased deployment of RGs
- Types of RGs and their evolution
- Middleware
- Summary

Home Networking - Four Aspects

Distribution of information (audio, video, data) around the home and the Internet between information appliances

Residential Gateway

The Essential Ingredient For Home Networking

- Single device connects all information appliances to each other and the Internet
- Bridges
  - Broadband access technologies
    - Satellite, ISDN, xDSL, cable modems
  - Home networking technologies
    - No new wires: phonelines, powerlines
    - New wires: IEEE 1394, USB2.0, Optic Fiber
    - Wireless: Bluetooth, HomeRF, Wireless LANs
- RG Market - US $8.9 billion (by 2003) (Cahners In-Stat Group)

The Residential Gateway

Integrating Broadband Access and Home Networking Functions into One Device

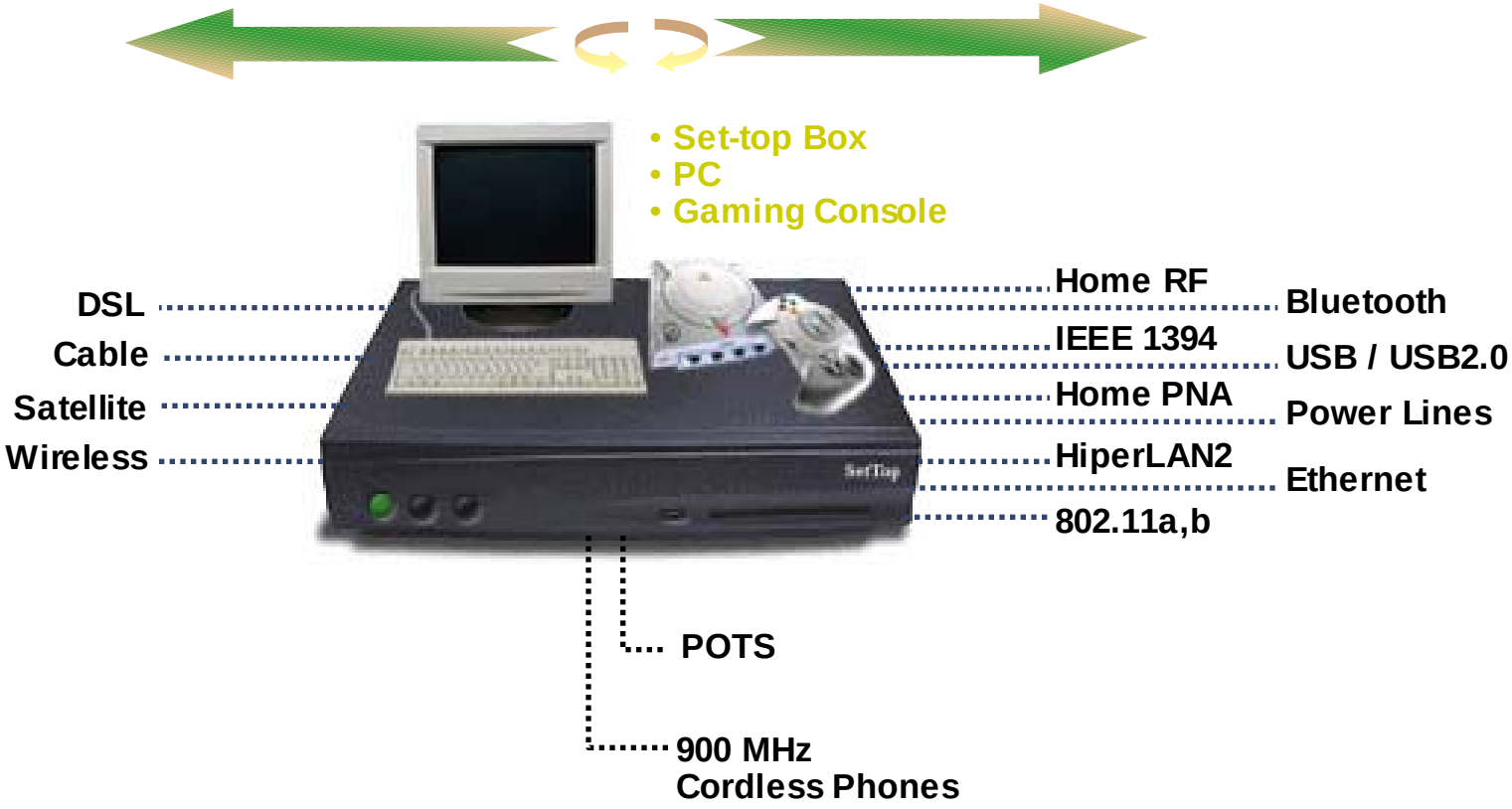

Purpose

- Unified platform
  - Central gateway for communications, information & entertainment
  - Access point between the home & outside world
- Primary interface between Internet and Home Network
  - Bridges the different broadband WAN & in-home LAN technologies
  - Bridge between home networking technologies
  - Provides bi-directional communications channel to every networked device in the home

Purpose

- Serves as an access platform for service providers
  - Remote deployment of Internet services to the home
  - Control, query & network administration functions
- Provides efficient delivery of new services to the home
  - Streaming video, multimedia messaging, home management, security, and on - line purchasing

RG Requirements

- Broadband access
- Security & privacy firewall
  - Supports secure e-commerce transactions, remote home control, & access from authorized service providers
- QoS for multiple intelligent devices
  - Compete asynchronously for various bandwidth capabilities
- Multi-layer network bridging
  - Protocol translation for multiple home networks
- Upgradeable platform

RG Deployment - The Incremental Change

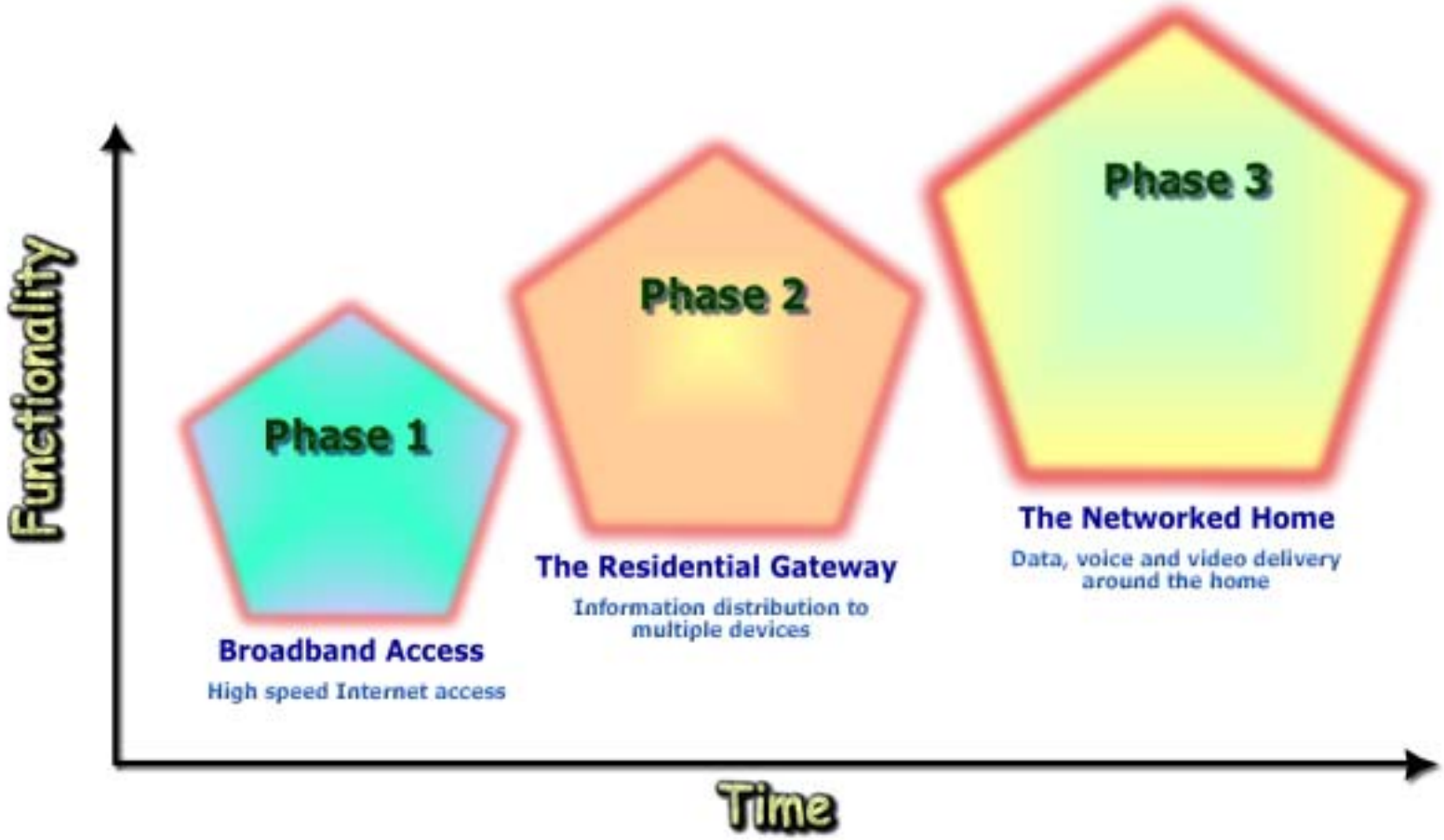

First & Second Generation RGs

- Bridge single WAN and LAN connections
- Types
  - Set-top box RGs
  - Digital modem based RGs
  - PC-based RGs
  - Gaming consoles
  - Screen phones/Web phones/Internet enabled phones
  - Digital TV
  - Utility centric RGs or service gateways
  - Next generation RGs

Digital Set-Top Box

- Set-top box - today
  - Deliver signals to a single device like cable TV or PC
  - Advanced models support HDD storage and web browsing
  - Needs to reside near cable / antenna connection
- Evolution into a RG
  - Distributes broadband to multiple devices within the home
  - Expands upon the capabilities of advanced set-top boxes
  - Can be located wherever convenient
  - Supports new services including automated meter reading and home automation

Set-top Box

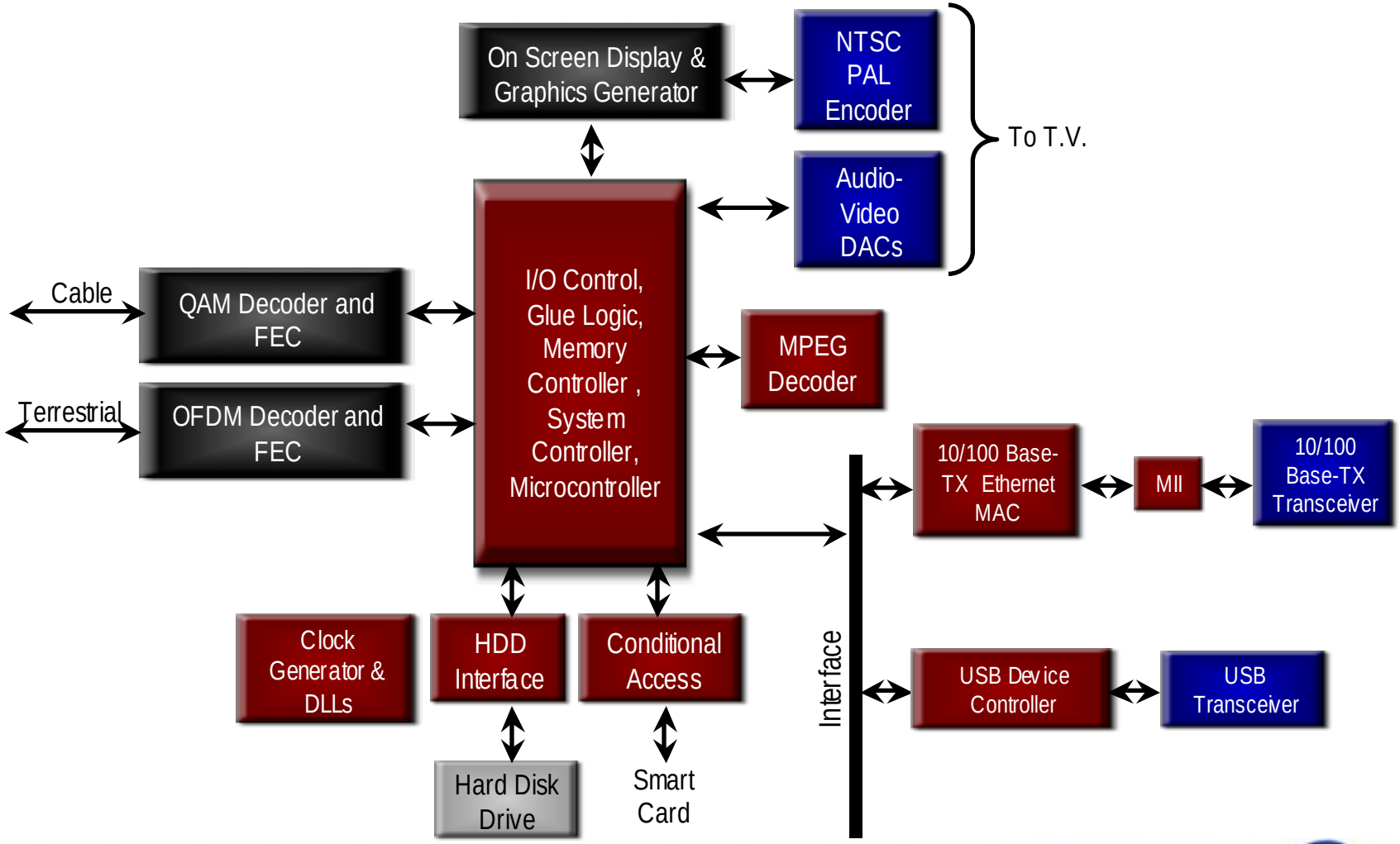
On Screen Display & Graphics Generator
NTSC PAL Encoder
To T.V.
Audio-Video DACs
I/O Control, Glue Logic, Memory Controller , System Controller, Microcontroller
Cable
QAM Decoder and FEC
Terrestrial
OFDM Decoder and FEC
MPEG Decoder
10/100 Base-TX Ethernet MAC
MII
10/100 Base-TX Transceiver
Interface
USB Device Controller
USB Transceiver
Clock Generator & DLLs
HDD Interface
Conditional Access
Hard Disk Drive
Smart Card

Set-top Box / Residential Gateway

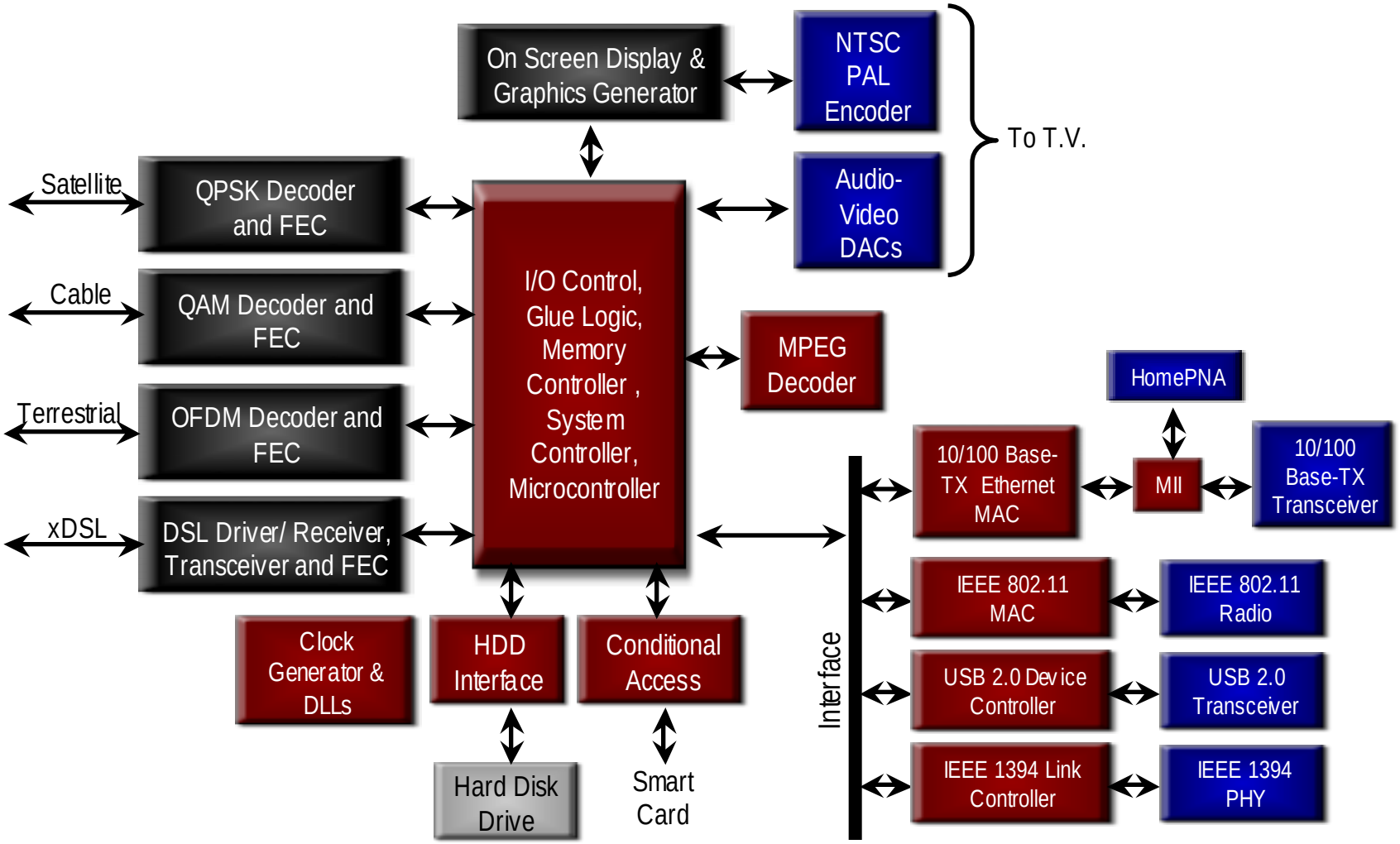

Broadband Access Technologies

- ADSL - Asymmetrical Digital Subscriber Line
  - Two standards: G.Lite ADSL & G.dmt ADSL
  - Speeds: Downstream up to 8Mbps & upstream up to 1.5Mbps
- Cable
  - Internet access using same cable used for TV transmission
  - Speeds up to 10Mbps
- ISDN - Integrated Digital Services Network
  - High-speed (up to 144Kbps), fully digital telephone service
- Satellite
  - Uses direct broadcast satellites that transmit TV programs
  - Download 350Kbps - upload limited by analog modem speeds

Digital Modems

- Enable broadband access to the home and provide
  - High-speed connection to the Internet
  - Always on
  - Simultaneous up-link and down-link communication
  - Provides > 25X the bandwidth vs. analog modems

Modem-Centric RGs

- Broadband termination device with integrated routing capabilities for Home Networking technologies
  - ADSL, Cable
- Sold in conjunction with services
  - Can be partially or completely subsidized
  - Consumer installs the gateway
    - The service provider saves the cost of a truck roll
- Configured to support only one specific HN technology
  - HomePNA, Ethernet, USB or wireless
  - Support for additional technologies requires buying a new gateway & reconfiguration of the home network

Satellite Modem

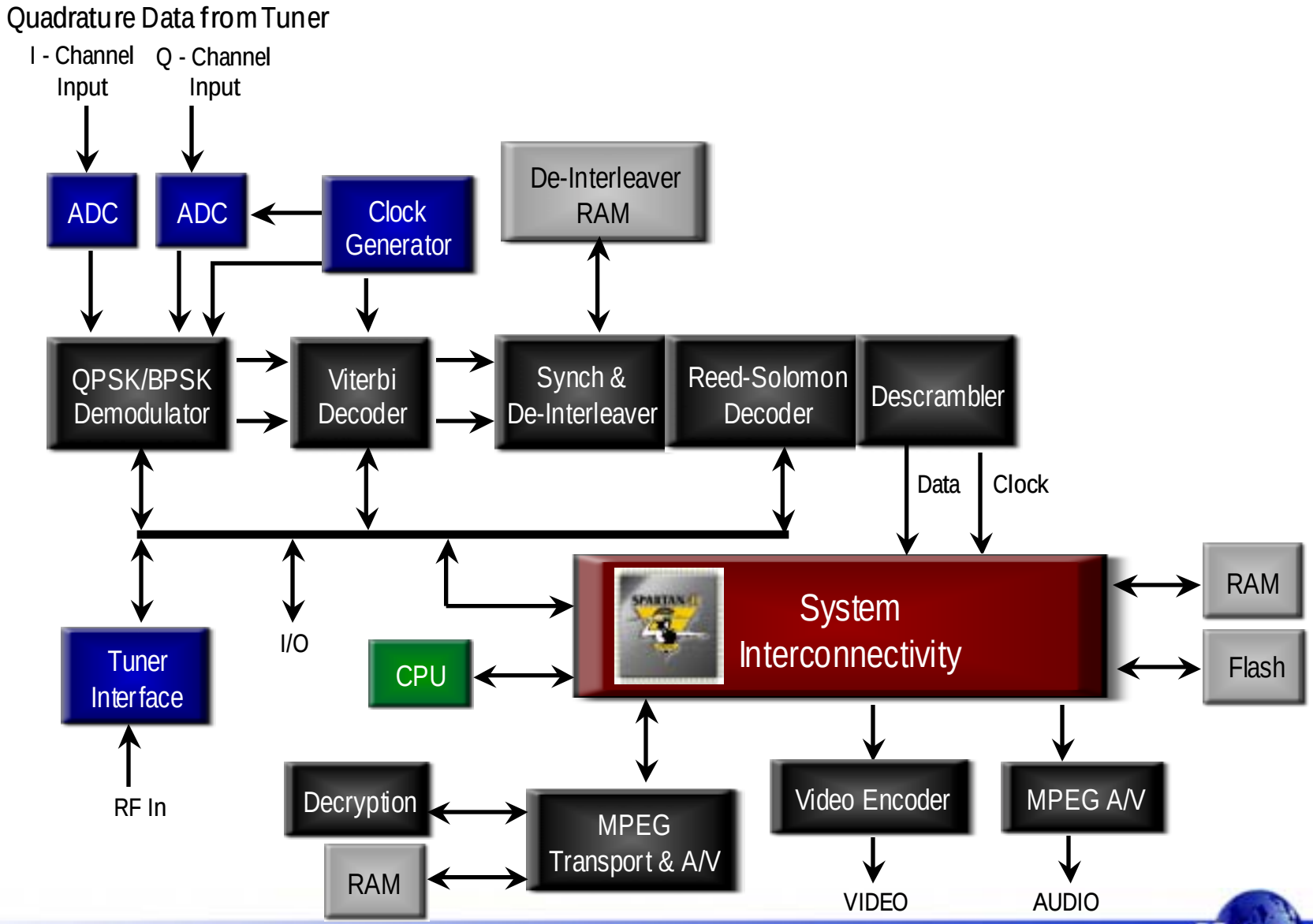

Satellite Modem Gateway

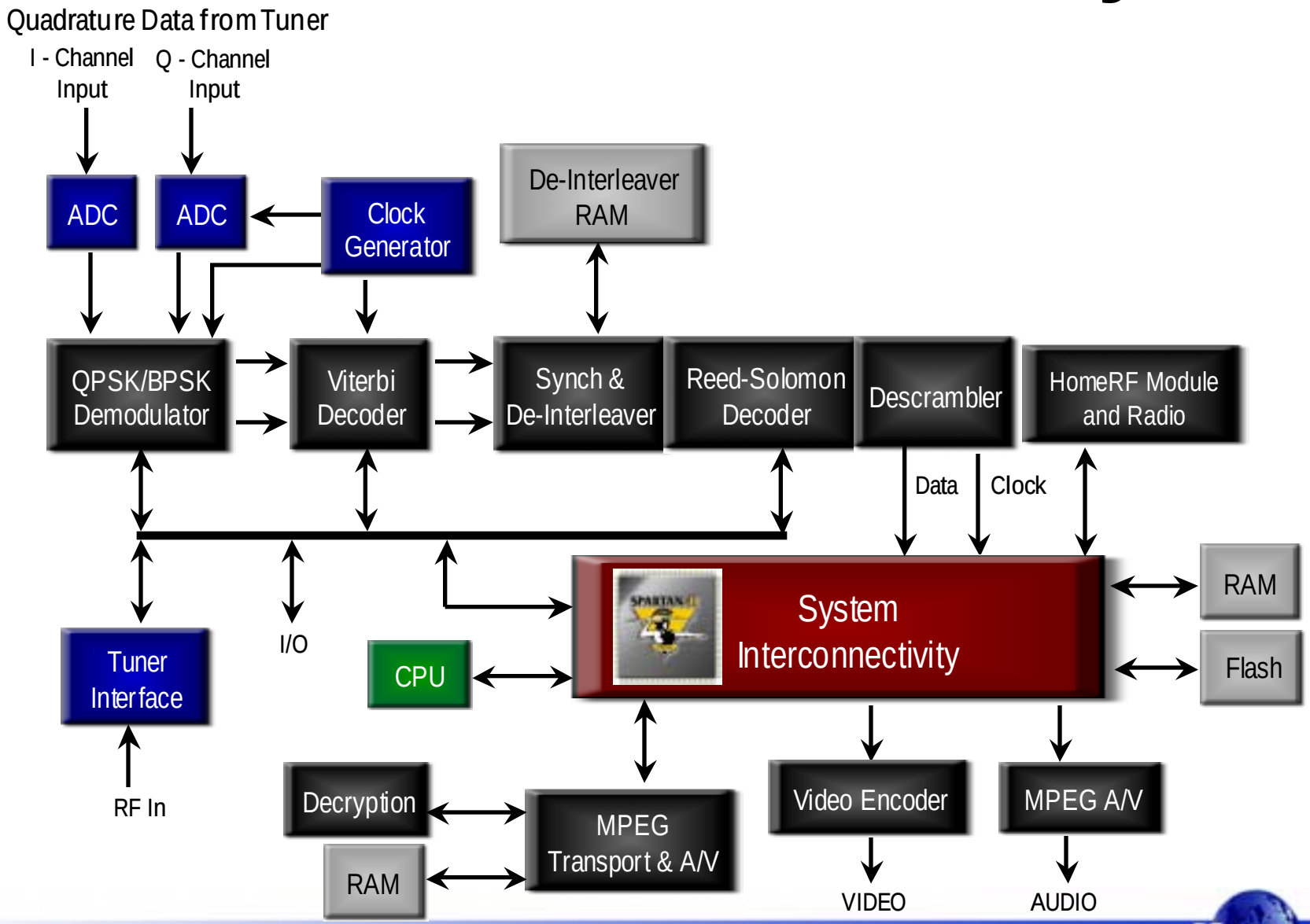

xDSL Modem

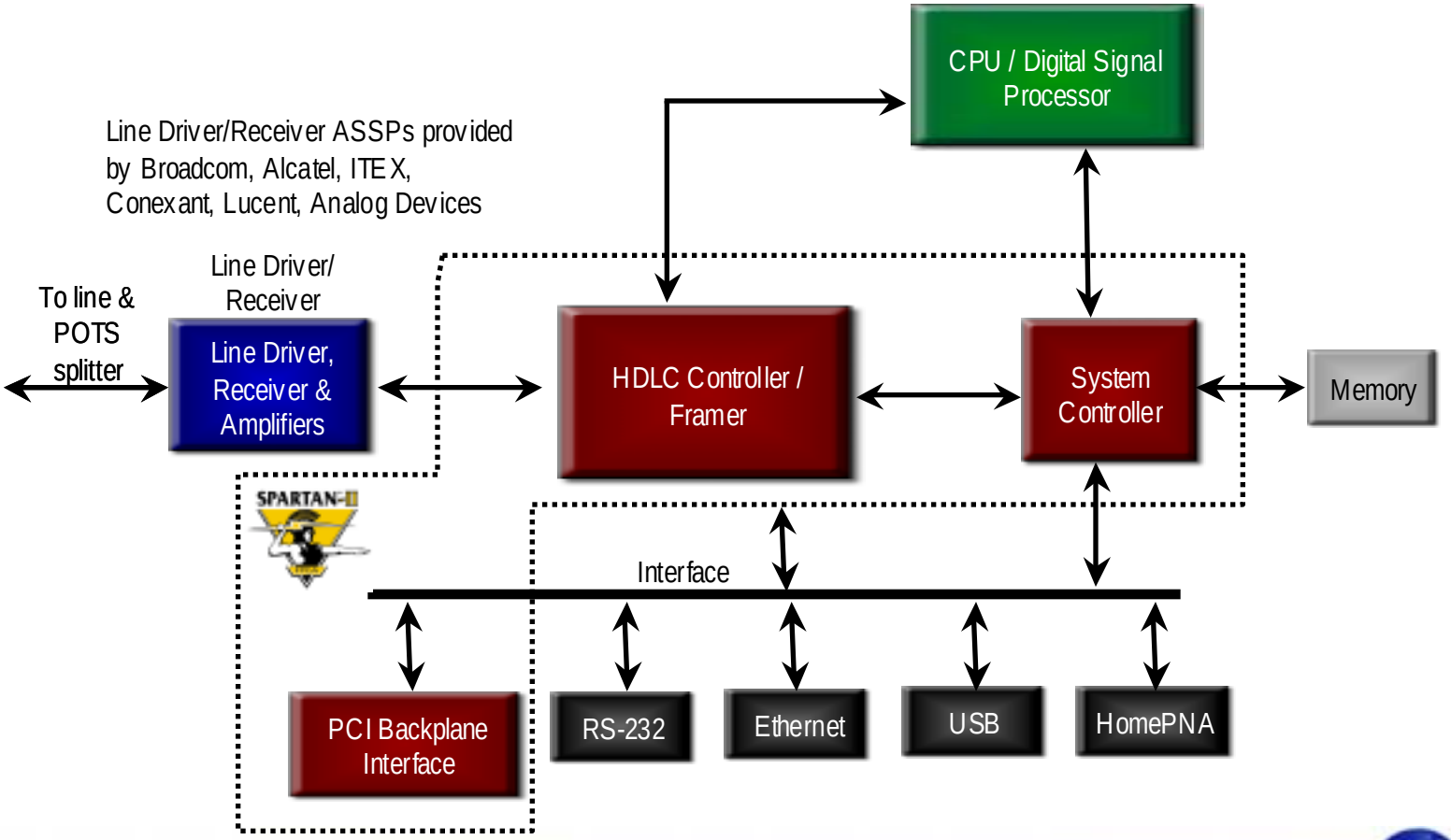
CPU / Digital Signal Processor
Line Driver/Receiver ASSPs provided by Broadcom, Alcatel, ITEX, Conexant, Lucent, Analog Devices
Line Driver/ Receiver
To line & POTS splitter
Line Driver, Receiver & Amplifiers
HDLC Controller / Framer
System Controller
Memory
SPARTAN-II
Interface
PCI Backplane Interface
RS-232
Ethernet
USB
HomePNA

DSL RG

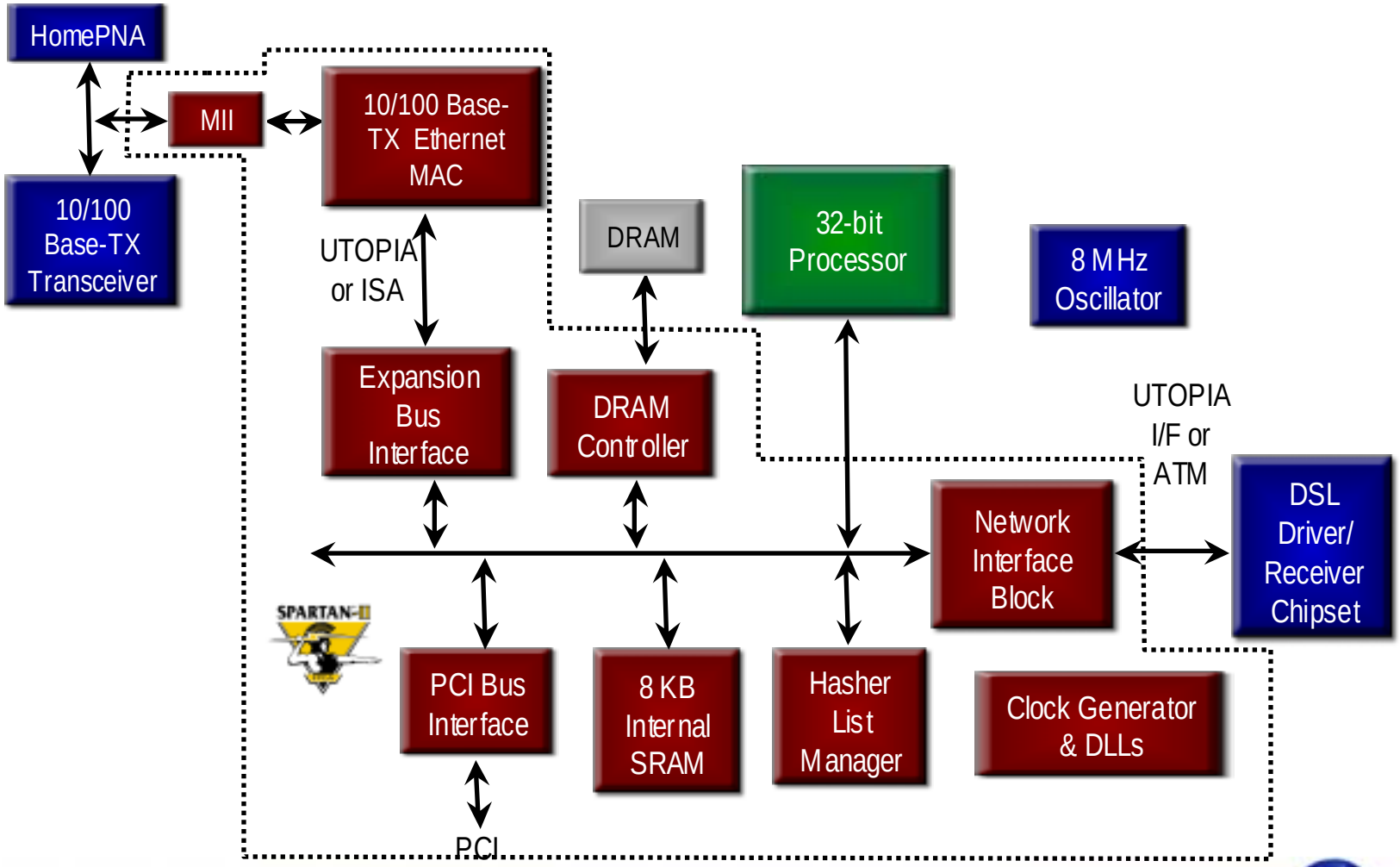
HomePNA
MII
10/100 Base-TX Ethernet MAC
10/100 Base-TX Transceiver
UTOPIA or ISA
DRAM
32-bit Processor
8 MHz Oscillator
Expansion Bus Interface
DRAM Controller
UTOPIA I/F or ATM
Network Interface Block
DSL Driver/ Receiver Chipset
SPARTAN-II
PCI Bus Interface
8 KB Internal SRAM
Hasher List Manager
Clock Generator & DLLs
PCI

Cable Modem

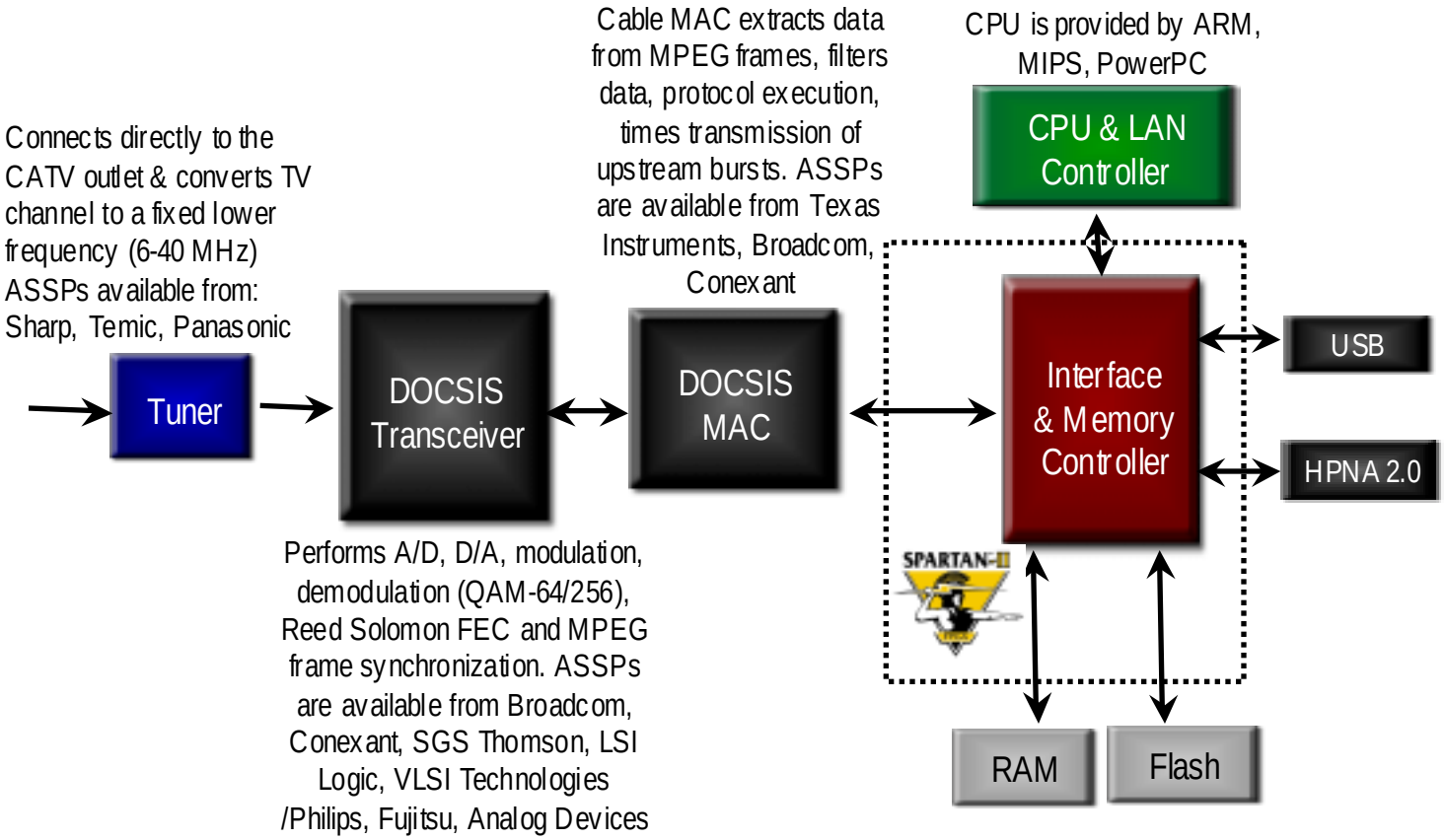
Connects directly to the CATV outlet & converts TV channel to a fixed lower frequency (6-40 MHz) ASSPs available from: Sharp, Temic, Panasonic
Tuner
DOCSIS Transceiver
Performs A/D, D/A, modulation, demodulation (QAM-64/256), Reed Solomon FEC and MPEG frame synchronization. ASSPs are available from Broadcom, Conexant, SGS Thomson, LSI Logic, VLSI Technologies /Philips, Fujitsu, Analog Devices
Cable MAC extracts data from MPEG frames, filters data, protocol execution, times transmission of upstream bursts. ASSPs are available from Texas Instruments, Broadcom, Conexant
DOCSIS MAC
CPU is provided by ARM, MIPS, PowerPC
CPU & LAN Controller
Interface & Memory Controller
SPARTAN-II
USB
HPNA 2.0
RAM
Flash

Cable Modem RG

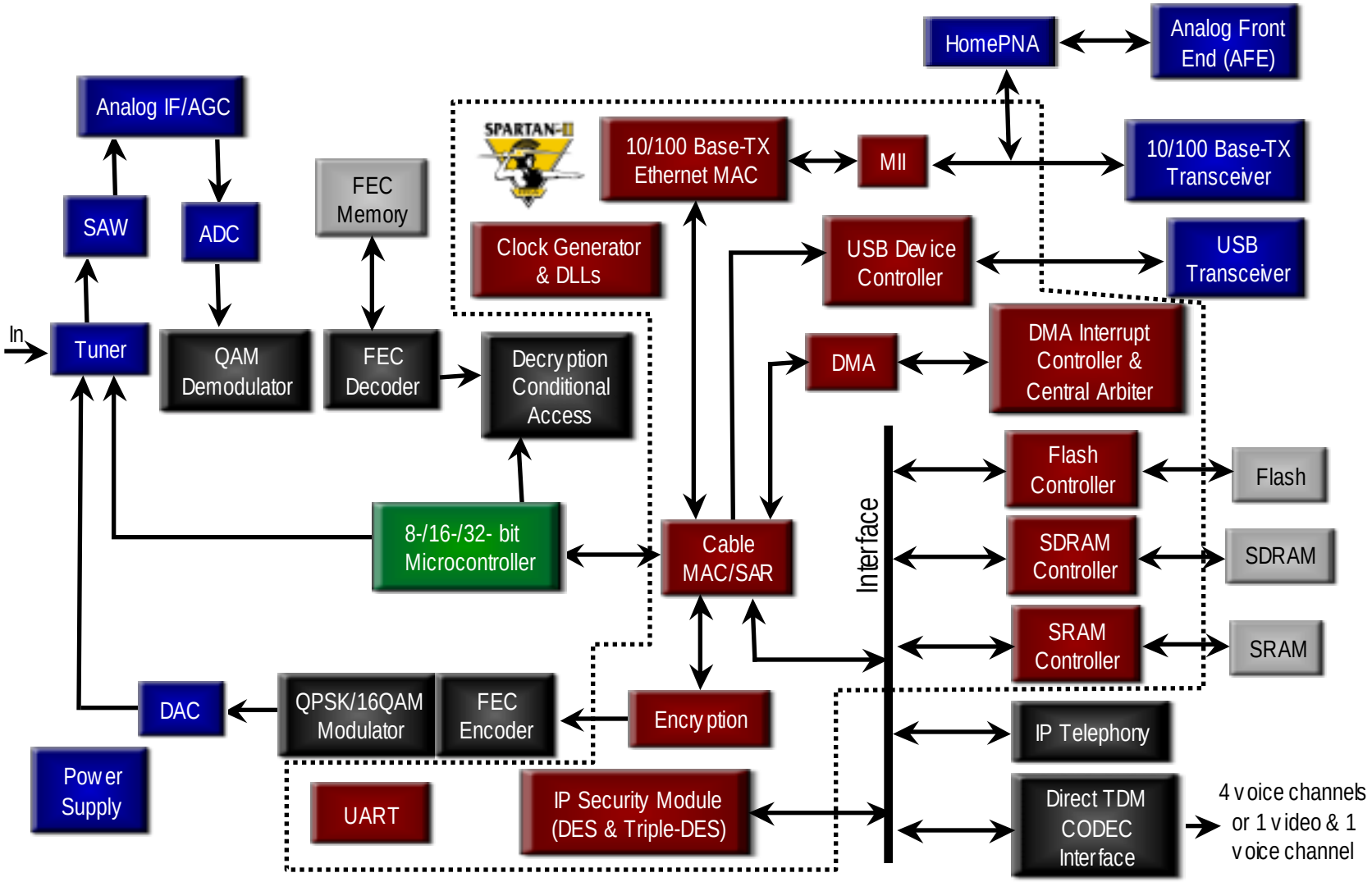

PC - The RG?

- RG functions such as routing can be performed by a PC that is correctly configured
- PC Advantages
  - Existing PC can do the job
- PC Disadvantages
  - Difficult to set up
  - PC will slow down when used for any other task
  - If the PC crashes the entire home network goes down
- Products typically based upon x86 processor & use ISA or PCI bus

PC - The RG

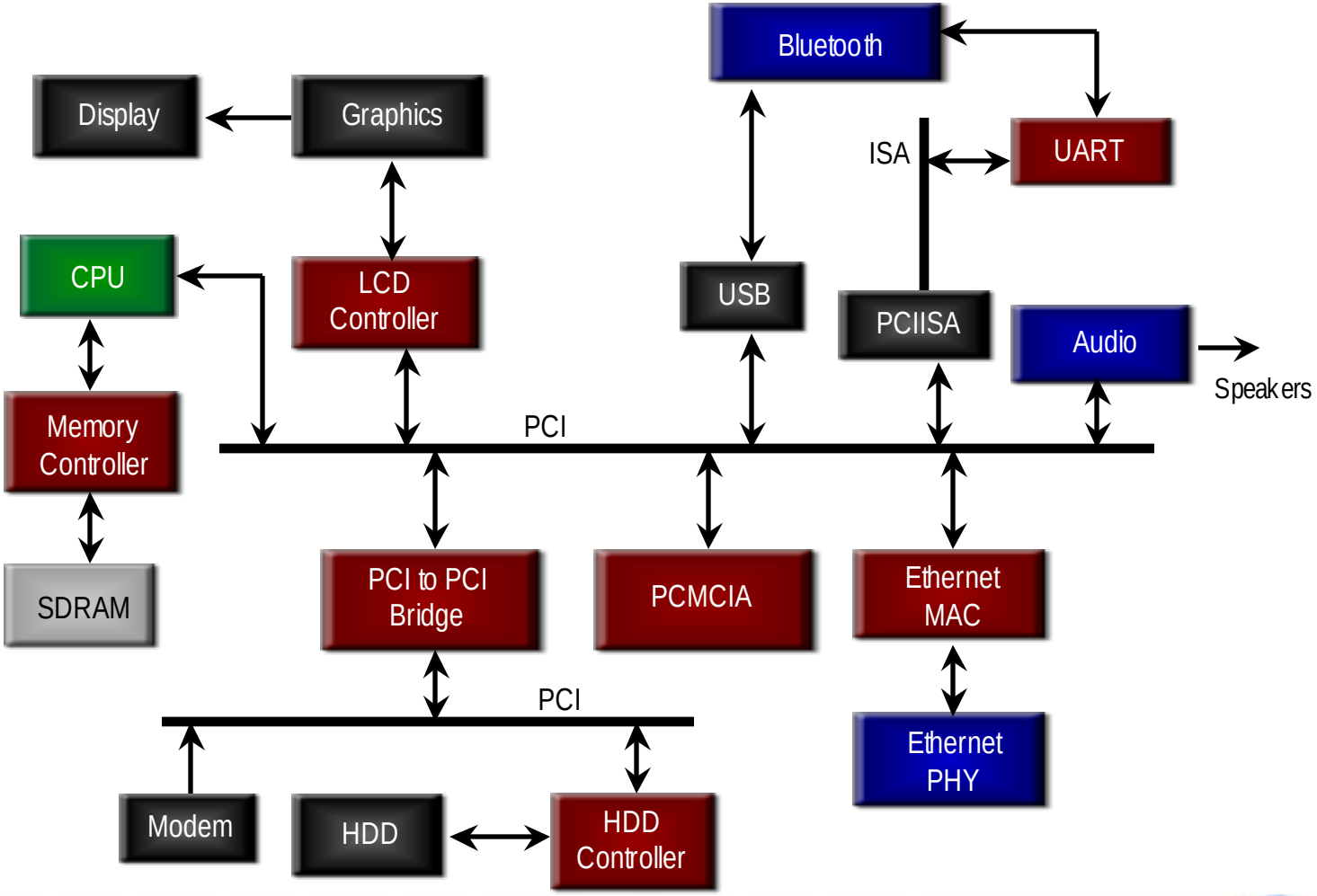
Bluetooth
Display
Graphics
ISA
UART
CPU
LCD Controller
USB
PCIISA
Audio
Speakers
Memory Controller
PCI
SDRAM
PCI to PCI Bridge
PCMCIA
Ethernet MAC
PCI
Ethernet PHY
Modem
HDD
HDD Controller

Gaming Console

- Gaming platforms
  - Multi-player gaming requires Internet access
- Most new products have a built-in 56K modem
- Future
  - Broadband connections enable gaming companies to begin e-distribution business such as movies, music, etc.
  - Home networking capabilities

Gaming Console

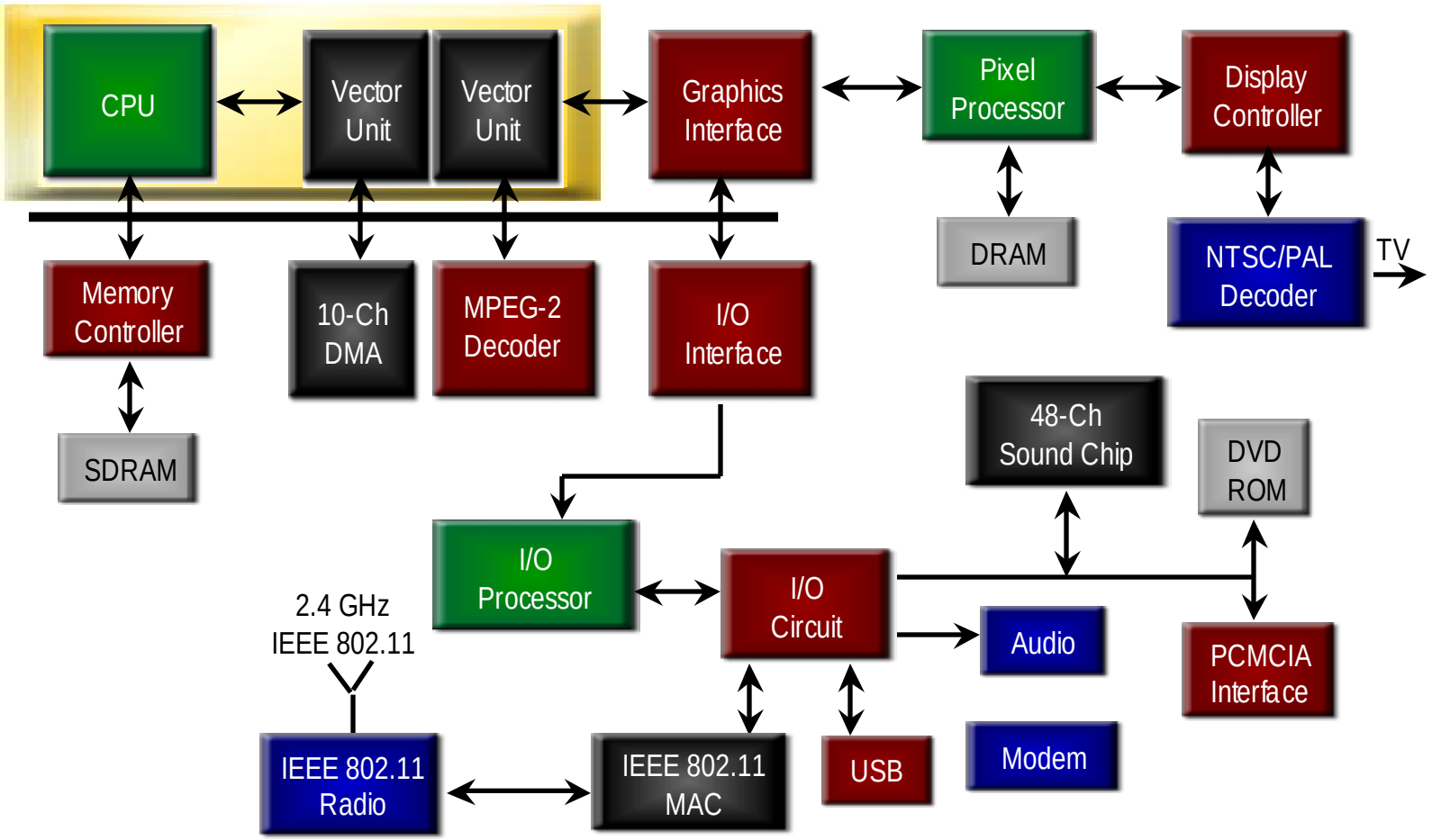

Screen Phones, Web Phones & Internet Enabled Phones

- Integrated telephones with built-in touch LCD screens
  - Enables convergence of voice, video & data communication
  - Users can make phone calls, answer email, & receive limited information from the Internet

Screen Phone

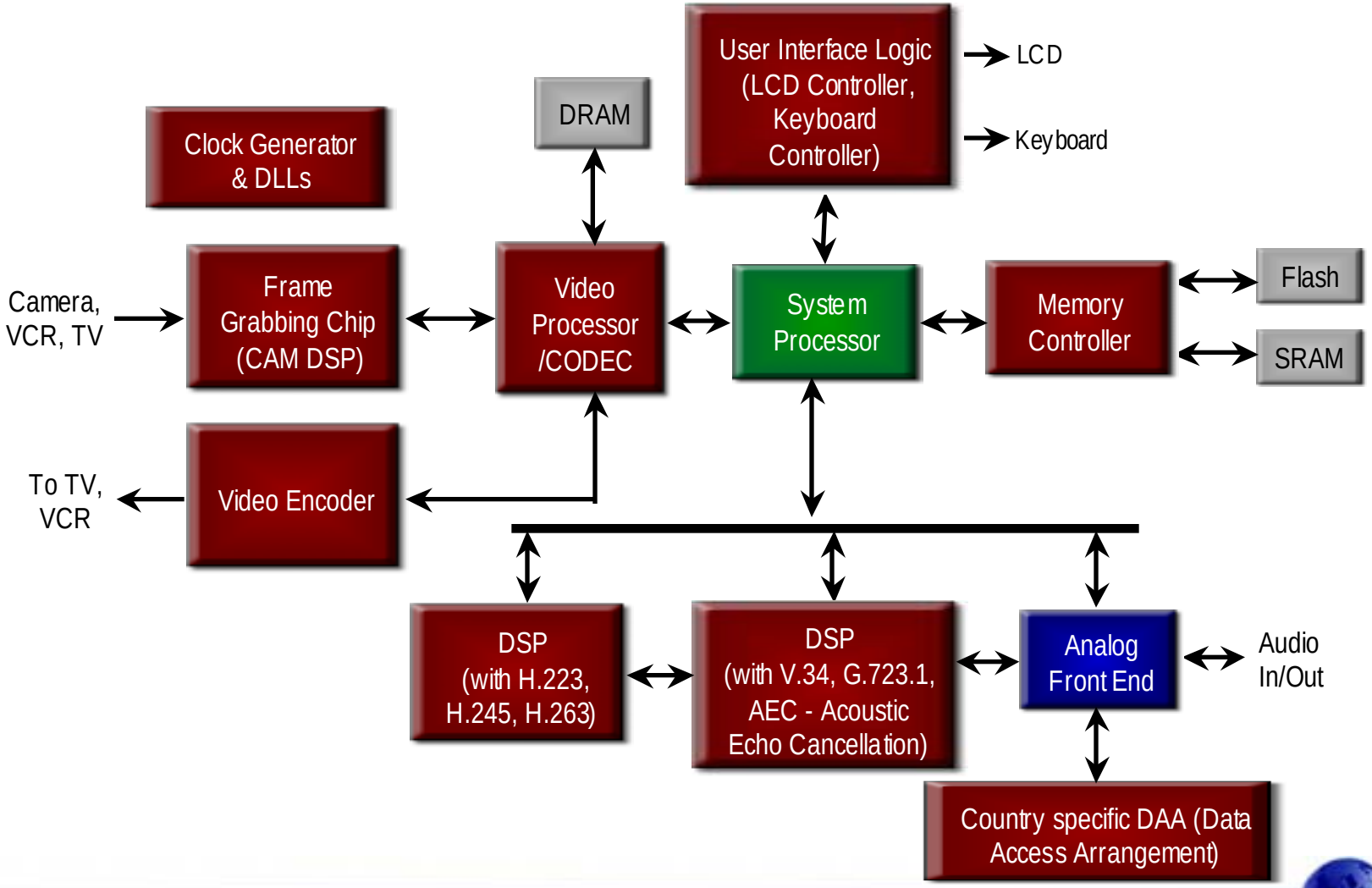

Digital TV RG

- Future digital TVs will assimilate the functions of set-top box and digital VCRs
  - Video recording
  - Email services
- Provide new services
  - Video-on-demand
  - Instant replay
  - Online shopping
  - Interactive TV

Digital TV RG

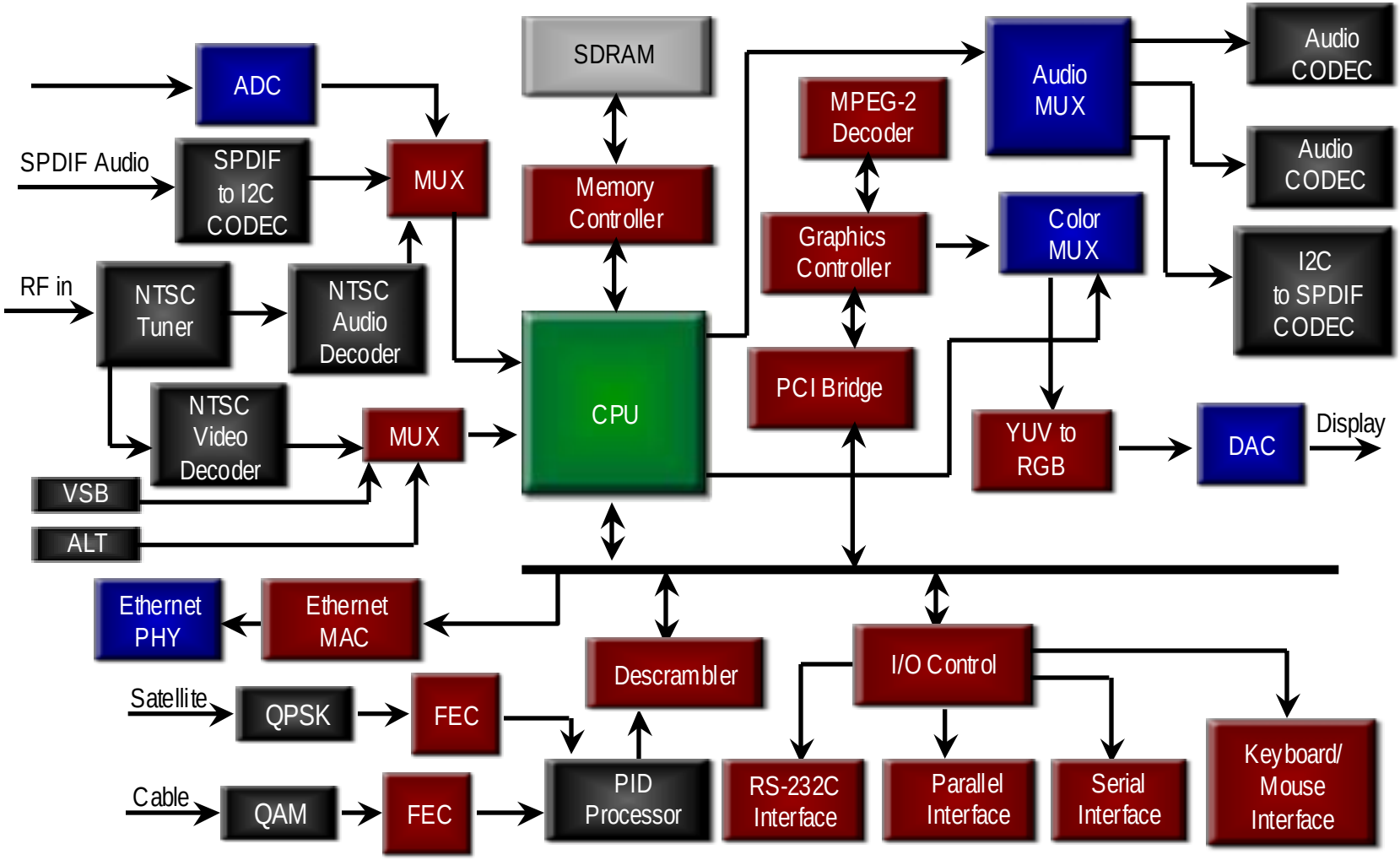

Utility-Centric / Services Gateway

- Enabled by network operators or service providers (SP) such as telephone operators, ISP, cable TV operators, utilities
- The utility/SP installs the gateway
  - SP recovers cost of hardware & installation through provision of multiple services
- Provides services such as automated meter reading (AMR), energy optimization, management & monitoring

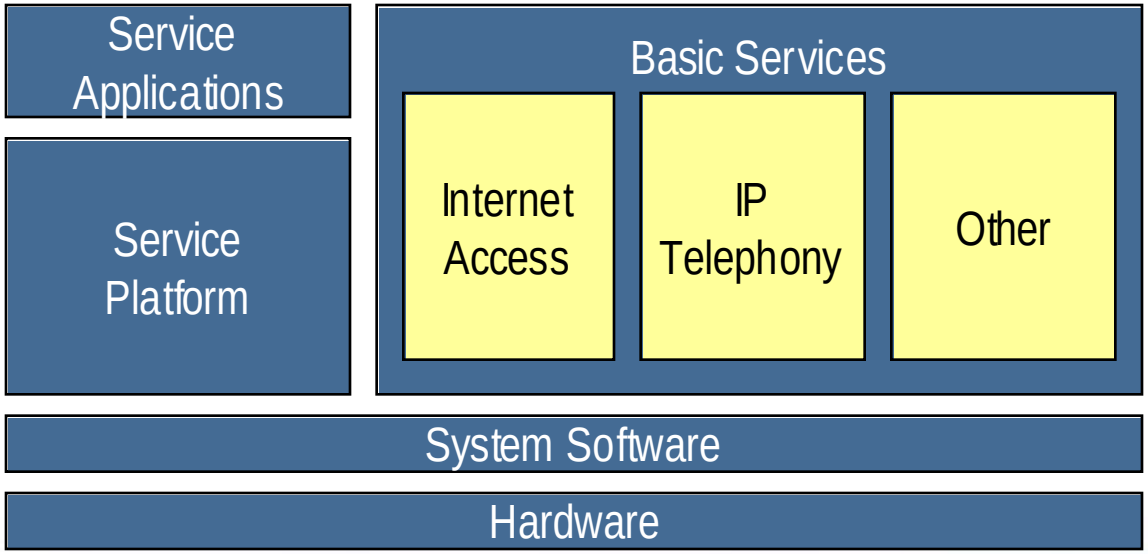

Preferred Provider for Bundled Services

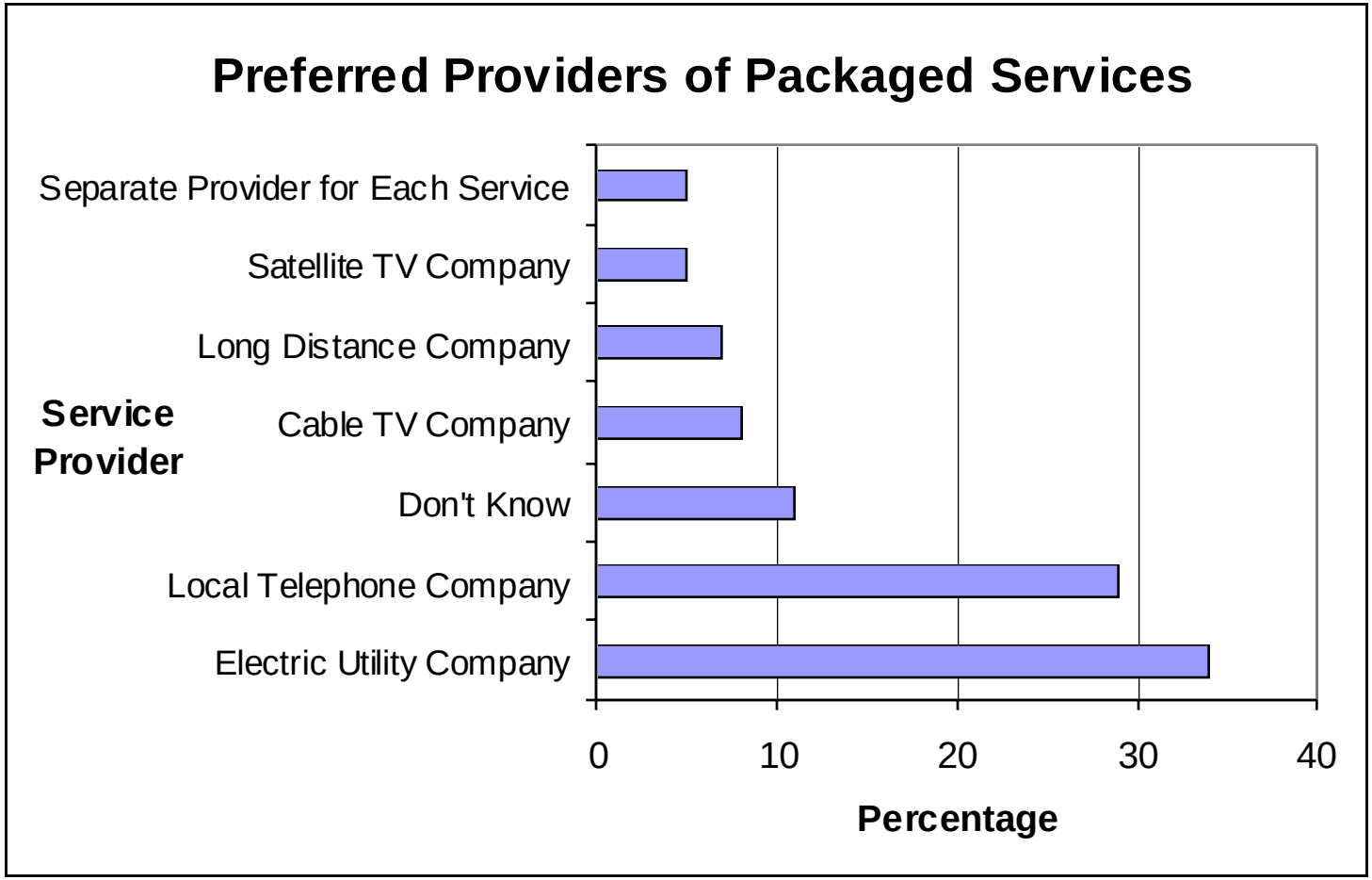

Source: Parks Associates

Next Generation/Multi-Service RGs

- These devices will evolve based on today's products
- Highly modular design supporting
  - Multiple WAN sources including wireless, xDSL or cable
  - Multiple LAN/home networking technologies
  - Telephony / voice services
  - Easy installation / set -up
  - Remote management

The “Perfect” RG

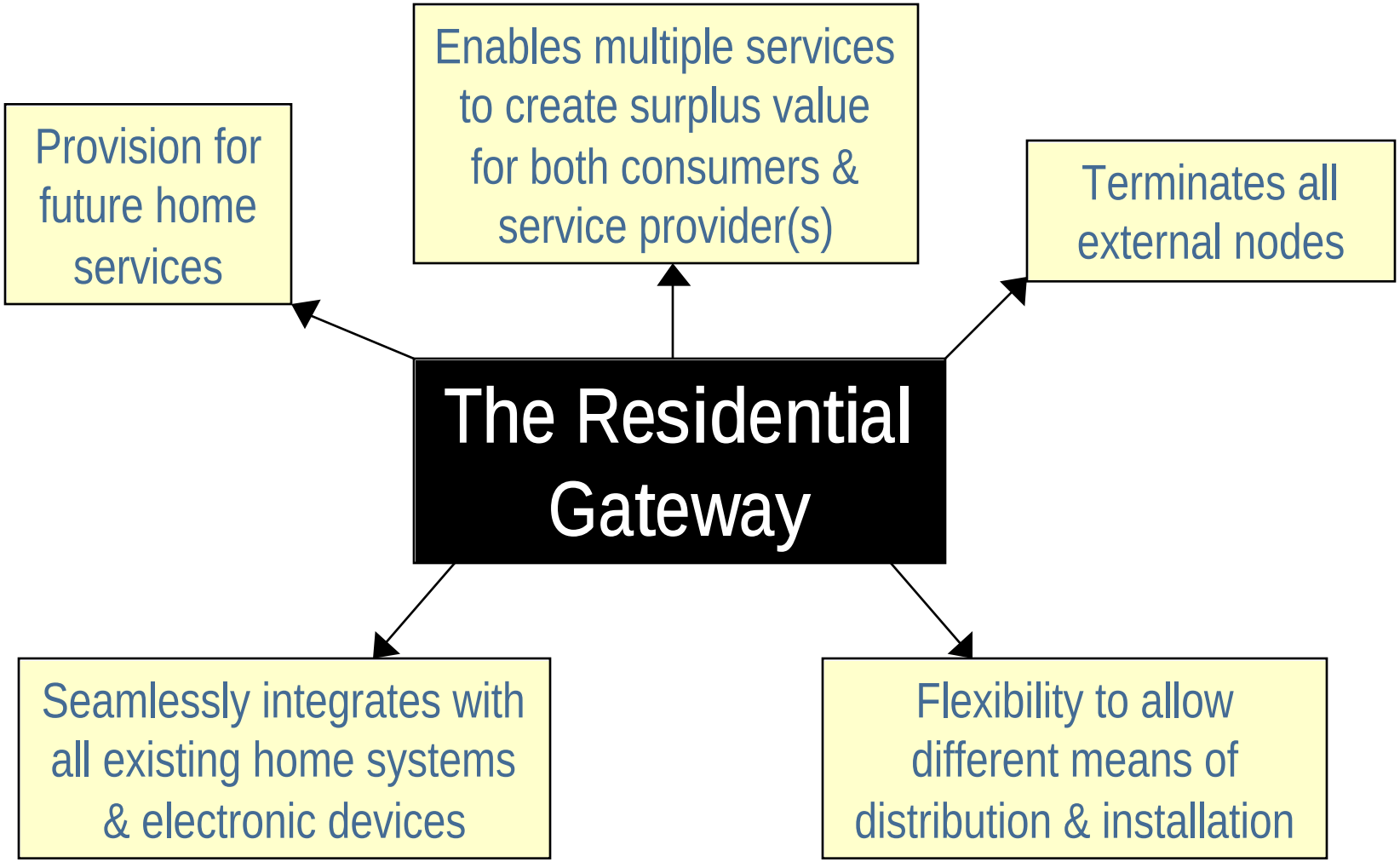

An Example Roadmap

Intelligent Premises Gateway

- Remotely Upgradeable
- Firewall
- Self Installation
- User Friendly Provisioning Interface
- Derived Voice (VoDSL upgradeable to VoIP)
- Wireless Voice
- Modular System Architecture
- PBX Like Features, and available on POTS
- Supports Multiple Packet Network Protocols

Multiservice Gateway

Residential Gateway

- Supports Multiple Derived Services

Integrated Access Device

- Router

Modem

- Supports Multiple LAN Technologies

- Derived Voice

- Broadband Access

Courtesy: Broadband Gateways

RG Market Drivers and Inhibitors

- Drivers
  - Service providers expanding into integrated services
  - Internet
  - New market opportunity for hardware & silicon vendors
  - Smart home construction
  - Low cost PCs
  - Widespread deployment of home networking
  - Always-on broadband connection
  - New entertainment options/applications
  - Remote monitoring
- Inhibitors
  - Unclear ownership/economic model
  - Current services are reliable & cheap
  - Support issues
  - Immature technology

Middleware

OSGi, UPnP, Jini, HAVi

Open Services Gateway Initiative

Middleware

- Used to isolate application programs from the details of the underlying hardware and networking components
- Home networking needs to support a large number of:
  - Information appliances
  - Information appliance manufacturers
- Middleware provides interoperability between the diverse systems
  - Different appliances, manufacturers, and networking technologies
- Middleware technologies include:
  - OSGi, UPnP, Jini, HAVi

Open Services Gateway Initiative (OSGi)

- Open industry standard for residential gateways
  - Supported by over 60 major companies including: Ericsson, Cisco, Nokia, Siemens, Sun Microsystems, Motorola, IBM…
  - Develop specs for API & physical-layer bridging features
  - OSGi leverages Jini and Java Virtual Machine (JVM)
- Enable connectivity & management of smart devices
  - Set-top boxes, cable modems, routers, residential gateways, energy management systems, consumer electronics & PCs
- Initial focus: Residential Gateways

OSGi Charter Focus

- Platform and application independence
- Support various levels of system security features
- Host multiple services
- Support multiple local networking technologies
- Support multiple broadband access technologies
- Coexist with other standards

UPnP - Universal Plug and Play

- Open, industry initiative - extension of ‘92 PnP initiative
  - Allows easy plug in and operation of any information appliance into any home network
  - Extends the discovery and enumeration of devices to include *networked* devices and services
  - Use a new information appliance without worrying about configuration settings or installing new drivers
- Distributed, open networking architecture
  - Supports peer-to-peer networking - does not require PC
  - Leverages Internet protocols (IP, TCP, UDP, HTTP, XML)
  - UPnP devices can be implemented on any OS

Jini Connection Technology

- Java based software layer
  - Based upon model that info appliances should connect and work together in communities
  - Allows info appliances to plug into home network without installing drivers or configuring OS
  - Robust error messaging - greater detail than: abort, retry, ignore
  - Supports “true” peer-to-peer plug and play (no user intervention beyond connecting a cable required)
  - Supports appliance upgrading without IT involvement
- Intended to run on anything with a “digital heartbeat”
  - Cell phones, digital cameras, PDAs, alarms, TVs, etc.

Using a Service

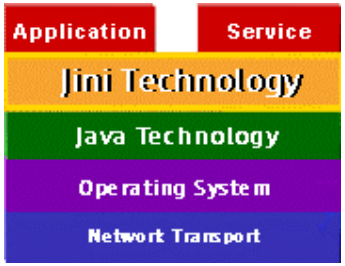

- Lookup service (Discovery) acts as an intermediary to connect a client looking for a service with that service
  - Person or program locates service by using the lookup service
  - Service's object is copied from the lookup service to requesting device where it will be used
- Once the connection is made (Join-in)
  - Lookup service is not involved in any of the resulting interactions between that client & that service
    - It does not matter where a service is implemented
    - Compatibility is ensured because each service provides everything needed to interact with it
    - There is no central repository of drivers

Home Audio Video Interoperability (HAVi)

- OS-neutral middleware focusing on transfer of real time digital AV content between AV equipment
  - Initiated by Sony & Philips, and includes: Thomson, Hitachi, Toshiba, Matsushita, Sharp, & Grundig
  - Based on IEEE 1394 as underlying networking technology
  - Provides seamless interoperability between digital consumer electronics and home appliances
    - Independent of network configuration & appliance manufacturer
  - Does not support home automation control
- Benefits
  - Automatic detection, registration, and upgrades
  - Instant coordination of various device functions

HAVi Device Classes

Controller Devices

Full AV device (FAV)
- Download and execute all HAVi applications
- Download and execute DCM

Intermediate AV device (IAV)
- Ability to communicate with other HAVi device
- Ability to execute limited applications
- Offers own control service
- Ability to host other known device

Base AV device (BAV)
- Offers own information in ROM

Legacy AV device (LAV)
- Conventional devices with NO HAVi SDD data (ROM)

Xilinx Envisioned Gateway Model

- Single “small” box
- Enable high-speed, two-way Internet, voice & video communication
  - Distribution of broadband services within the house/small office
  - Seamless connection & simultaneous operational capabilities
- Multiple digital phone (VoDSL) lines
  - Separate telephone & data lines
- Allow secure access
  - From any Internet-accessible remote location via any standard Web browser
- Firewall security protection
- Affordable price points
- Minimize truck rolls
  - Management software for remote provisioning, service management, diagnostics, software upgrades
- Remotely upgradeable

Residential Gateway

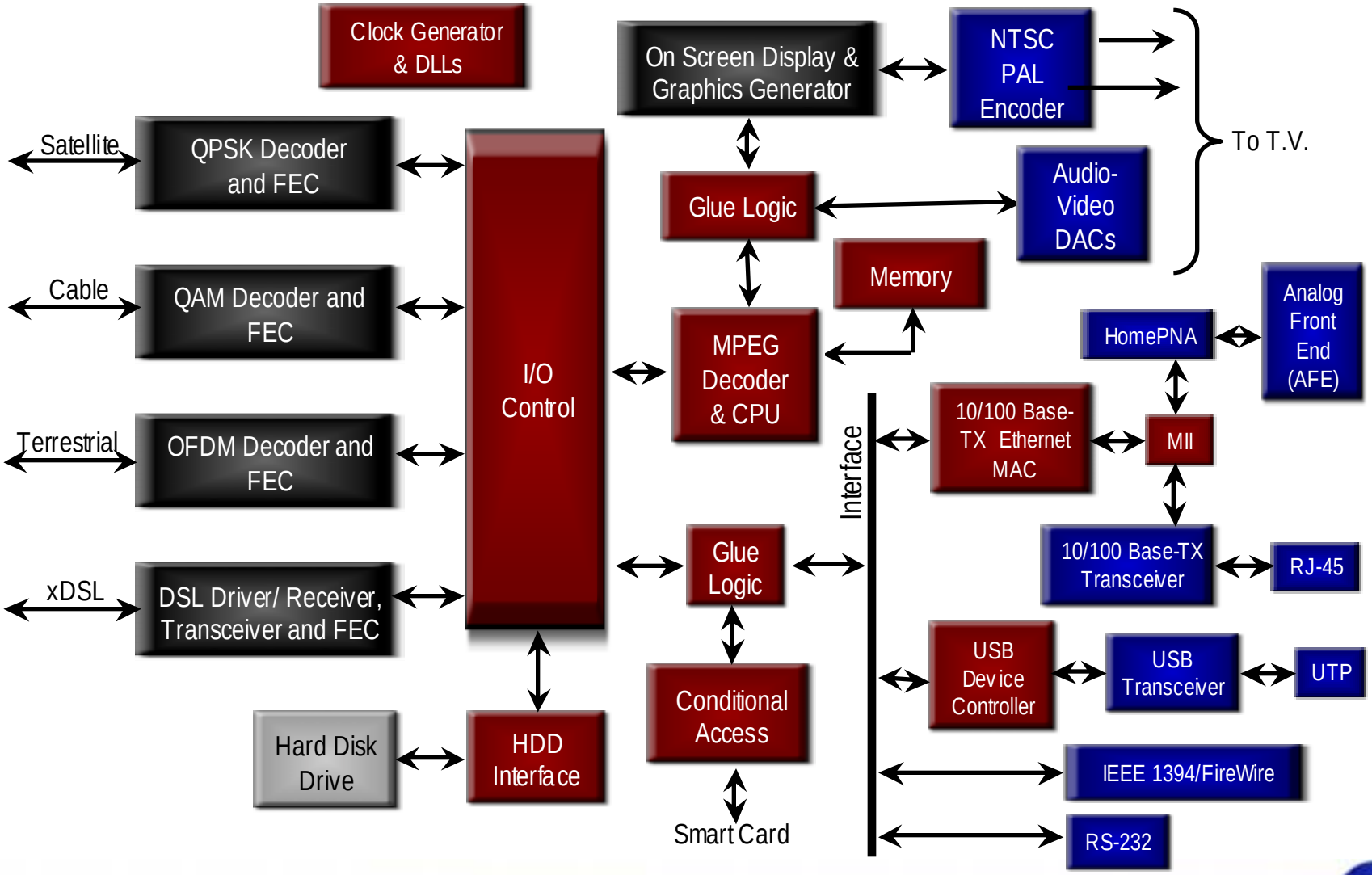

Summary

- Residential gateways provide broadband access to the home and network the information appliances in the home
    - Broadband access technologies
        - Satellite, ISDN, xDSL & cable modems
    - Home networking technologies
        - HomePNA, HomePlug, Ethernet, 1394, HomeRF, wireless LANs
- Xilinx solutions
    - Enabling broadband access in digital modems
    - Bridges disparate technologies
    - System interfacing
    - Encryption

XILINX®

2001
HOME NETWORKING
INTERNATIONAL SEMINAR SERIES

esp
EMERGING STANDARDS
& PROTOCOLS

Summary

- Extreme chaos in home networking
  - Multiple standards
  - Evolving standards
  - Interoperability???
- Xilinx solutions address the different needs of this evolving market
  - Reprogrammability provides - time to market & time in market
  - Xilinx enables solutions for all aspects of Home Networking
    - Broadband access
    - Residential gateways
    - Technology bridges between Home Networking technologies
    - Information appliances and Home Networking technologies

www.xilinx.com/esp

Xilinx Helps Redefine Product Development Time Line for Convergence Markets

eSP is the Industry's First Web Portal & Comprehensive Resource

- eSP is a True System Design Resource

eSP Extends the Traditional Benefits of Programmable logic to Convergence Customers' Market Requirements

- TTM & Design Flexibility

Thank You

2001
HOME NETWORKING
INTERNATIONAL SEMINAR SERIES

XILINX